STANLEY

DUBUIS

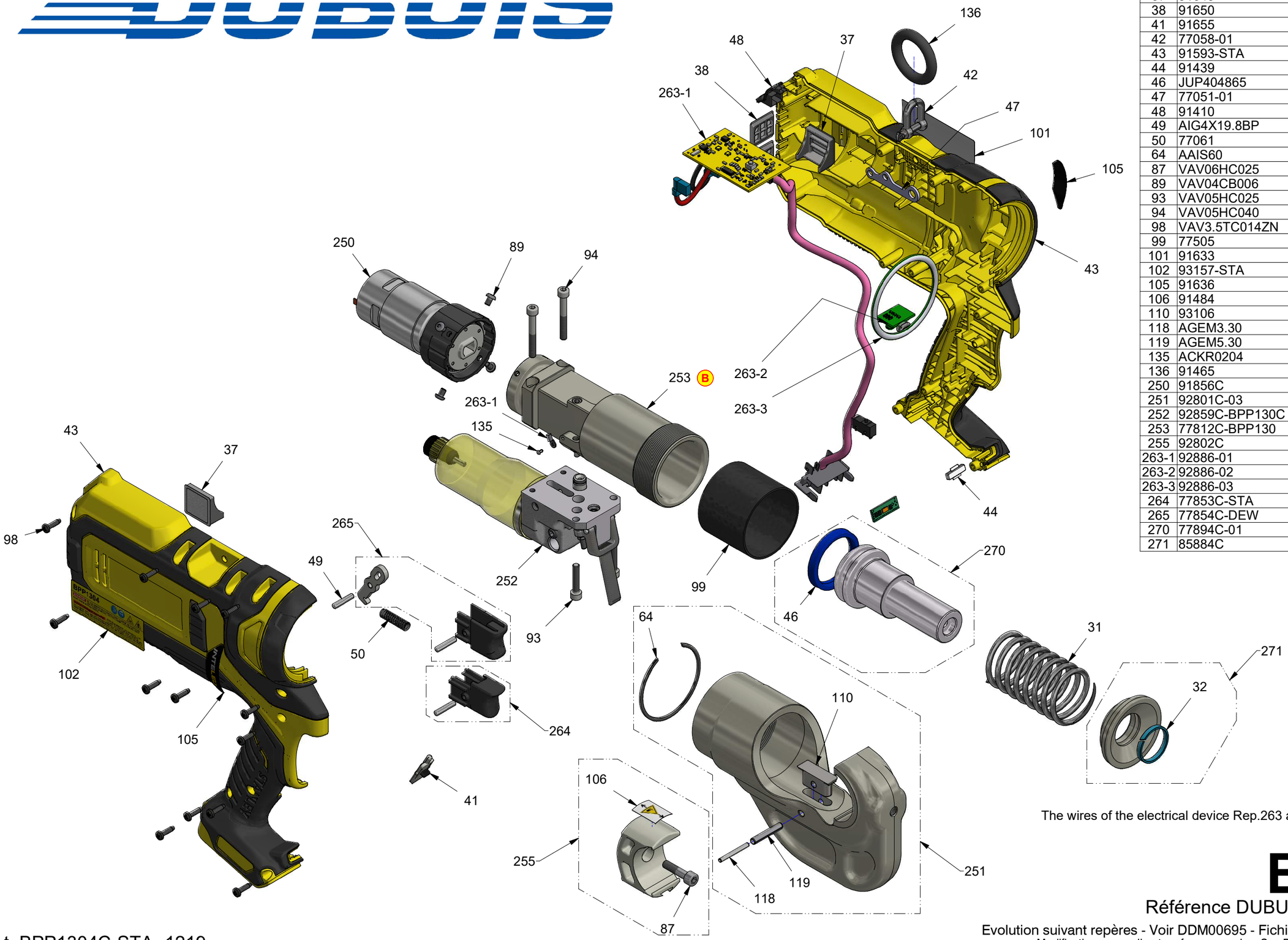

Rep.	REFERENCE	Qté	DESCRIPTION
19	85081-01	1	
24	85069	1	STOP RING
31	85085	1	SPRING
32	SGET3100390	1	GUIDING SEGMENT
37	91649	2	SIDE MEMBRANE
38	91650	2	REAR MEMBRANE
41	91655	1	TRIGGER LOCK
42	77058-01	1	SHACKLE
43	91593-STA	1	HOUSING SET
44	91439	1	LENS LED
46	JUP404865	1	LEAP SEAL
47	77051-01	1	SHACKLE HOLDER
48	91410	1	USB COVER
49	AIG4X19.8BP	1	CALIBRATED PIN
50	77061	1	SPRING
64	AAIS60	1	RETAINING RING
87	VAV06HC025	1	SCREW
89	VAV04CB006	4	SCREW
93	VAV05HC025	2	SCREW
94	VAV05HC040	2	SCREW
98	VAV3.5TC014ZN	13	SCREW
99	77505	1	PROTECTION COVER
101	91633	1	STANLEY LABEL
102	93157-STA	1	BPP1304 LABEL
105	91636	2	INTELED LABEL
106	91484	1	CRUSH HAZARD LABEL
110	93106	1	LOCKING KEY
118	AGEM3.30	1	ELASTIC PIN
119	AGEM5.30	1	ELASTIC PIN
135	ACKR0204	1	GROOVED PIN
136	91465	1	STRAP RING
250	91856C	1	MOTOR/REDUCTION UNIT
251	92801C-03	1	CRIMPING HEAD
252	92859C-BPP130C	1	RESERVOIR UNIT
253	77812C-BPP130	1	HYDRAULIC BODY UNIT
255	92802C	1	DIE HOLDER UNIT
263-1	92886-01	1	MAIN BOARD UNIT
263-2	92886-02	1	DAUGHTER BOARD UNIT
263-3	92886-03	1	RING LED UNIT
264	77853C-STA	1	ADVANCE TRIGGER UNIT
265	77854C-DEW	1	RELEASE TRIGGER UNIT
270	77894C-01	1	PISTON UNIT
271	85884C	1	STOP RING UNIT

The wires of the electrical device Rep.263 are not all represented

BPP1304

Référence DUBUIS : BPP1304C*STA ind.B

Evolution suivant repères - Voir DDM00695 - Fichier 150666 à partir de l'outil
Modifications according to reference marks - See DDM00695 - File 150666 from tool

L38209

t_BPP1304C-STA- 1219