KW Hydraulik
Aggregate und Werkzeuge
www.dynaset-hydraulik.de info@kw-hydraulik.de +49 3675 421 980

DYNASET OIL COOLERS ÖJ 5-25kW

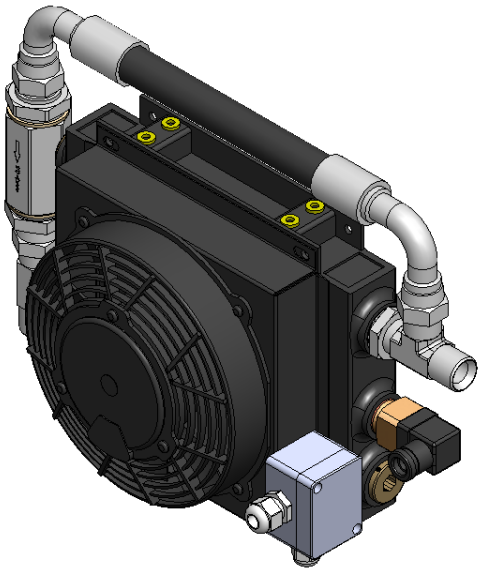

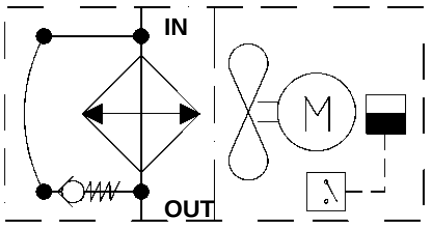

Symbol

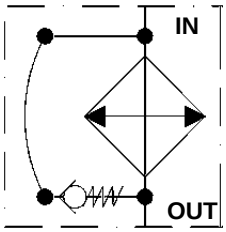

Simplified symbol

APPLICATIONS AND PRINCIPLE

DYNASET ÖJ oil coolers are designed to be used in every kind of dynamic-oil circuits. Design of cooler enables effective cooling power with minimum pressure loss over cooler. Compact and reliable structure enables operating in many conditions and installations. The core of coolers is made of long life aluminuium, which gives a high mechanical, pressure and chemical resistance. DYNASET oil coolers are equipped with parallel mounted by-pass valve and termostatic switch. By-pass valve mounted with flexible hose minimizes pressure loss over cooler, when oil is cold and oil viscosity is high. When oil heats up and viscosity decreases all oil flows throug cooler and maximal cooling power is reached. At the same time by-pass valve preserves whole hydraulic return line from pressure peaks on oscillating oil flow decreasing pressure peaks. Thermostatic switch starts cooler fan automatically when tempreature of fluid rises above switching point. The cooler fan stops automatically when fluid temperature decreases.

PARAMETERS

OIL COOLER MODEL	WORKING PRESSURE max.	OIL FLOW max.	WORKING TEMP max.	HYDRAULIC CONNECTIONS		OIL VOLUME	AIR FLOW	FAN POWER*	dB	DIMENSIONS W x H x D	WEIGHT
				IN	OUT						
	bar	l/min	°C	BSP	BSP	l	m^3/h	kW	A	mm	kg
ÖJ 5kW 12VDC	27	80	130	3/4"	3/4"	0,4	630	0,05	67	440 x 300 x 140	7,2
ÖJ 5kW 24VDC	27	80	130	3/4"	3/4"	0,4	630	0,05	67	440 x 300 x 140	7,2
ÖJ 10kW 12VDC	27	120	130	1"	1"	1,2	2240	0,217	67	550 x 420 x 200	13
ÖJ 10kW 24VDC	27	120	130	1"	1"	1,2	2330	0,231	67	550 x 420 x 200	13
ÖJ 15kW 12VDC	27	140	130	1"	1"	1,4	2240	0,217	67	550 x 420 x 215	13,8
ÖJ 15kW 24VDC	27	140	130	1"	1"	1,4	2330	0,231	67	550 x 420 x 215	13,8
ÖJ 20kW 12VDC	27	160	130	1"	1"	1,7	2240	0,217	67	625 x 430 x 215	16
ÖJ 20kW 24VDC	27	160	130	1"	1"	1,7	2330	0,231	67	625 x 430 x 215	16
ÖJ 25kW 12VDC	27	200	130	1 1/4"	1 1/4"	2,6	2900	0,283	67	800 x 625 x 210	25,7
ÖJ 25kW 24VDC	27	200	130	1 1/4"	1 1/4"	2,6	2900	0,276	67	800 x 625 x 210	25,7

IP CLASS 65 on all models
*Recommended fuse size 30A
Thermostatic switch switching point: 60°C Switch off-point: 50°C
OPTIONAL: Thermostatic switch switching point: 50°C Switch off-point: 40°C

PARAMETERS

DIMENSIONS

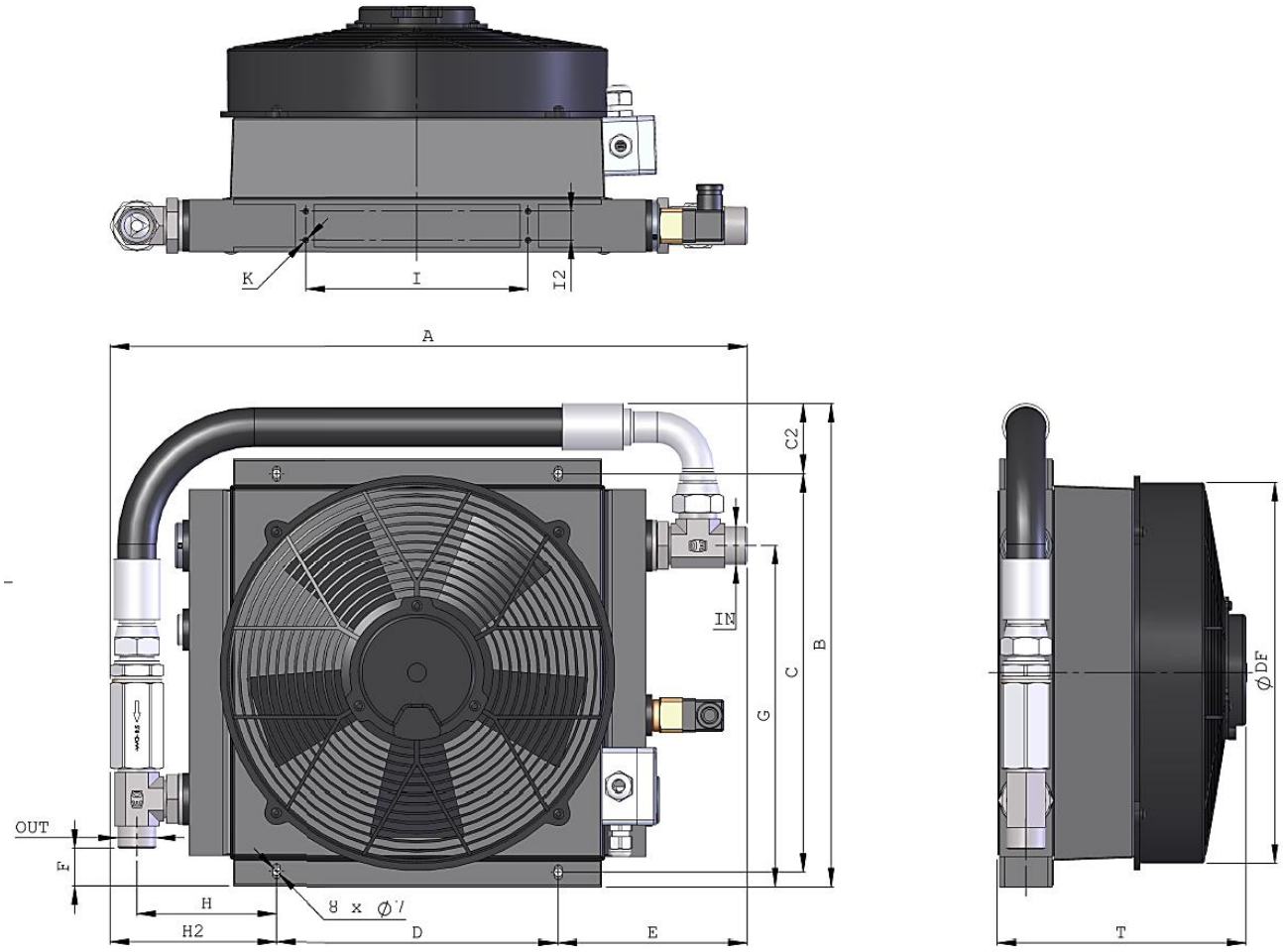

OIL COOLER MODEL	A	B	C	C2	ØDF	D	E	F	G	H	H2	I	I2	K	T	IN	OUT
	mm	mm	mm	mm	mm	mm	mm	mm	mm	mm	mm	mm	mm	mm	mm	BSP	BSP
ÖJ 5kW	440	300	220	75	190	190	133	5	185	92	115	140	24	8xM6	140	G3/4"	G3/4"
ÖJ 10kW	550	420	340	85	305	240	162	32	290	120	143	190	24	8xM6	200	G1"	G1"
ÖJ 15kW	550	420	340	85	305	240	162	32	290	120	143	190	36	8xM6	215	G1"	G1"
ÖJ 20kW	625	430	375	100	305	300	172	69	315	130	153	250	36	8xM6	215	G1"	G1"
ÖJ 25kW	800	625	490	130	385	420	200	55	405	145	175	370	36	8xM6	210	G1-1/4"	G1-1/4"

ÖJ 5kW

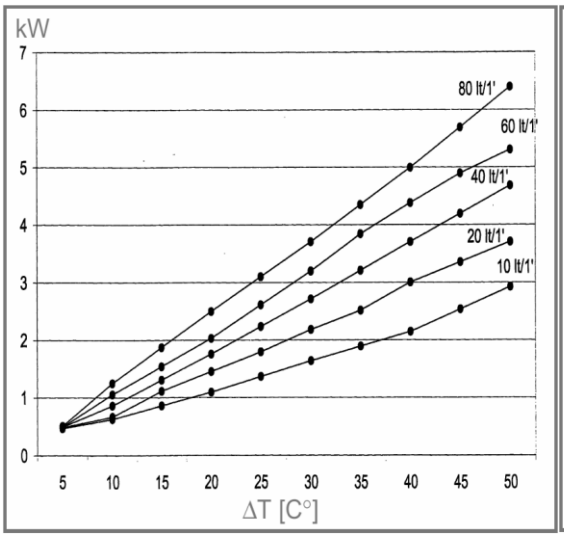

Cooling power

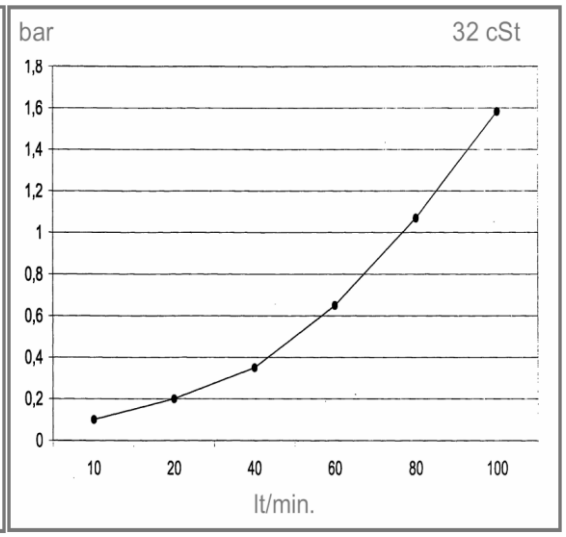

Pressure loss

ÖJ 10kW

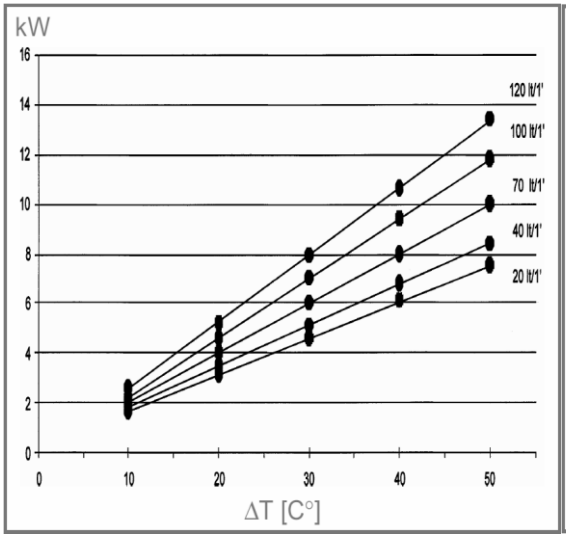

Cooling power

Pressure loss

ÖJ 15 kW

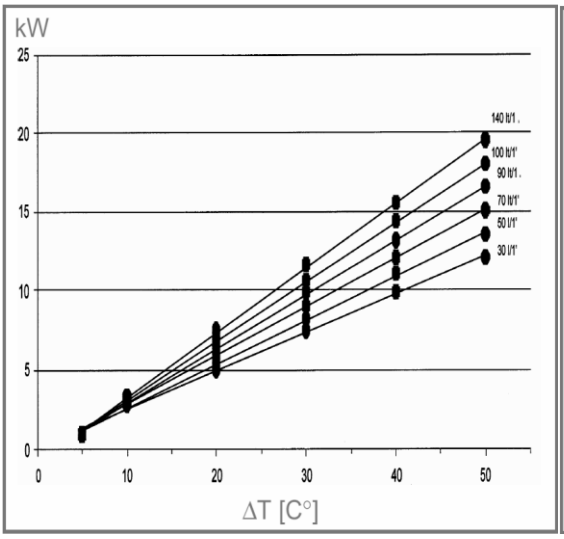

Cooling power

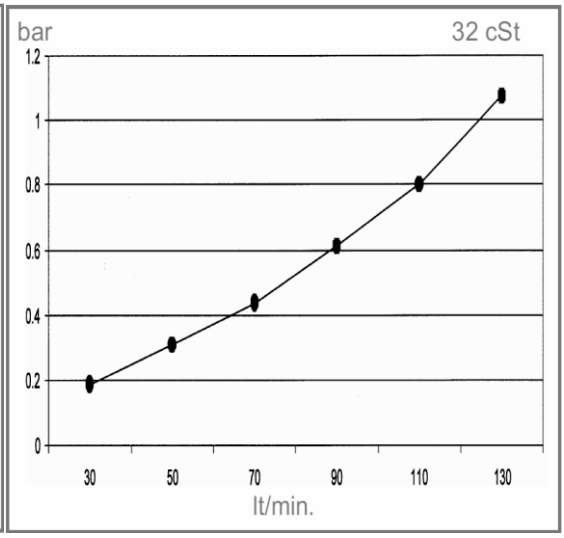

Pressure loss

ÖJ 20kW

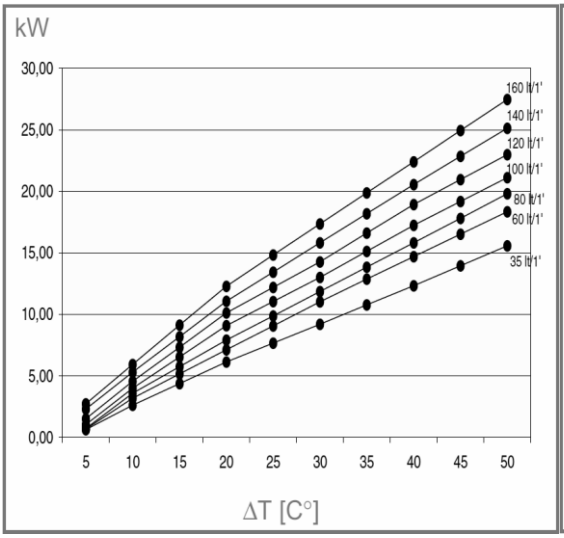

Cooling power

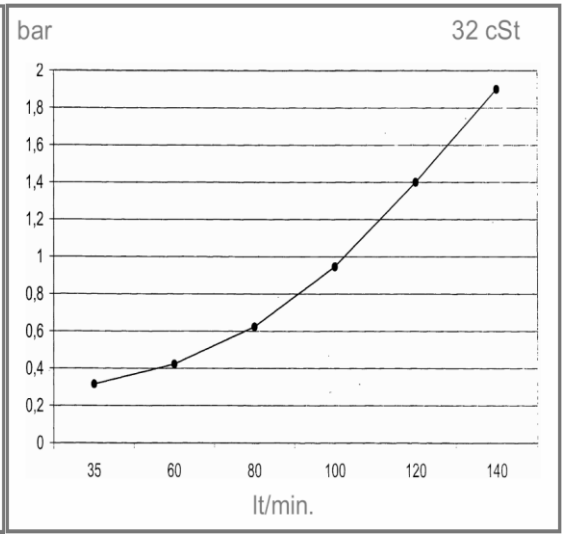

Pressure loss

ÖJ 25kW

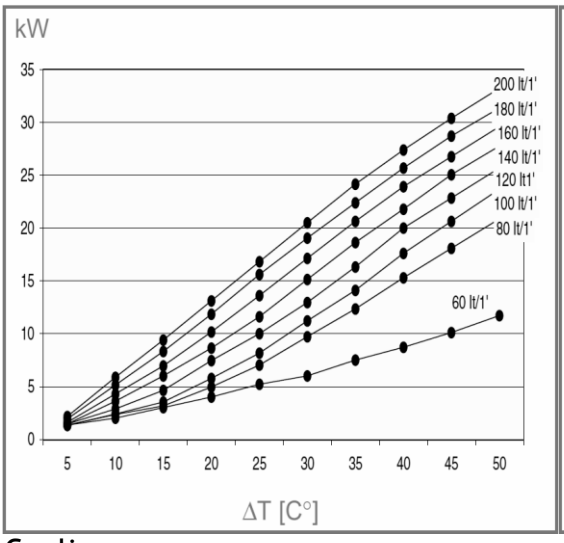

Cooling power

Pressure loss

INSTALLATION

For a correct installation:

NOTE!

- The cooler has to be supported on rigid installation platform at least from 4 attachment points on each corner of the cooler.
- It's recommended to use flexible and elastic elements on attachment between cooler and installation platform.
- Use flexible piping to connect cooler on hydraulic system.
- Install cooler on the return line on hydraulic system before return filter and oil tank.
- Use at least as large pipe/hose as connection ports on cooler to ensure minimum pressure loss and proper cooling
- Make sure that cooler is not assembled too near obstacles to ensure sufficient air flow to cooler fan. Minimum distance between cooler core and wall is 60mm. See the picture below.
- For a fan electric connection use at least 2,5mm^2 cross-section cable. Fuse size 30A.

1. Attach cooler on platform
2. Install the piping. Use corresponding fittings to ensure proper and leak-free connection
3. Connect electric wiring to the realy in electric connection box
4. Start the working machine
5. Check possible pipeline leakage

INSTALLATION

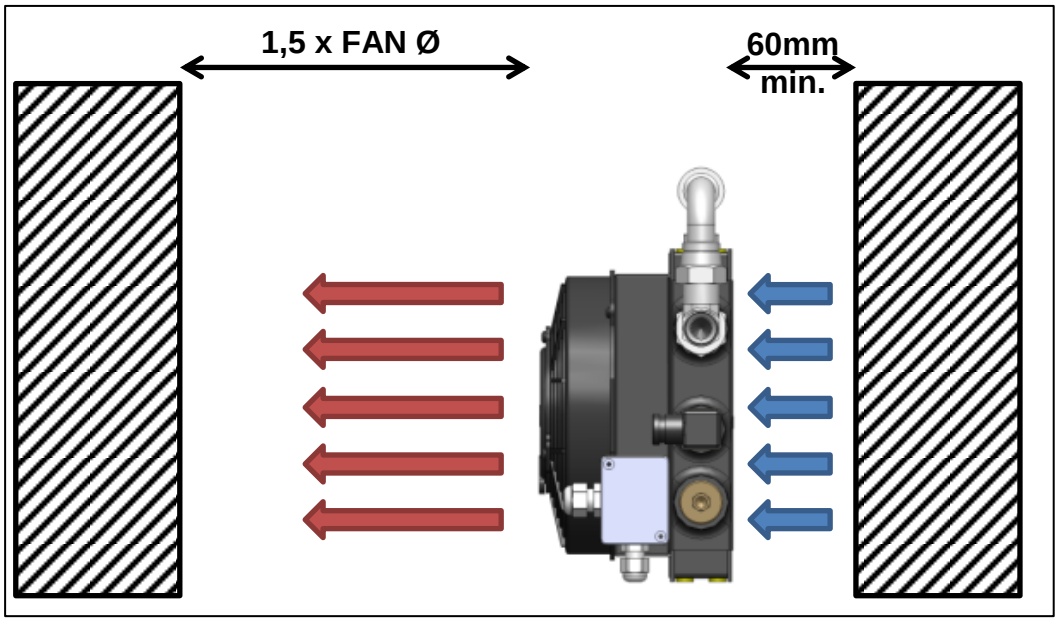

Minimum mounting distances from obstacles

ELECTRIC INSTALLATION

- Use 30A fuse and minumum 2,5mm^2 cross-section cable on fan electric connection
- Route cable through PG9 cable gland on the bottom of connection box
- Connect supply voltage + wire on RED connector in the connection box
- Connect supply voltage – wire on BLUE connector in the connection box

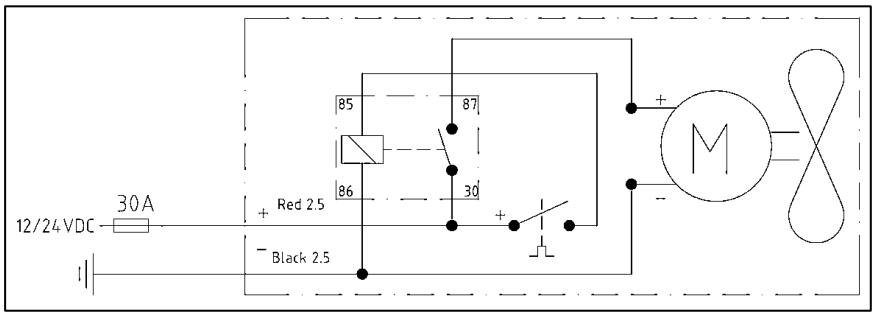

Electrical diagram

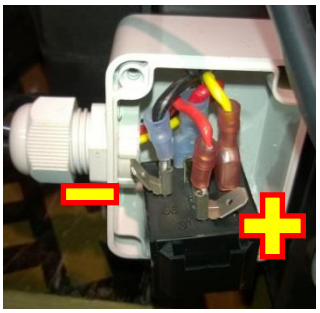

Electric connection box

SPARE PARTS

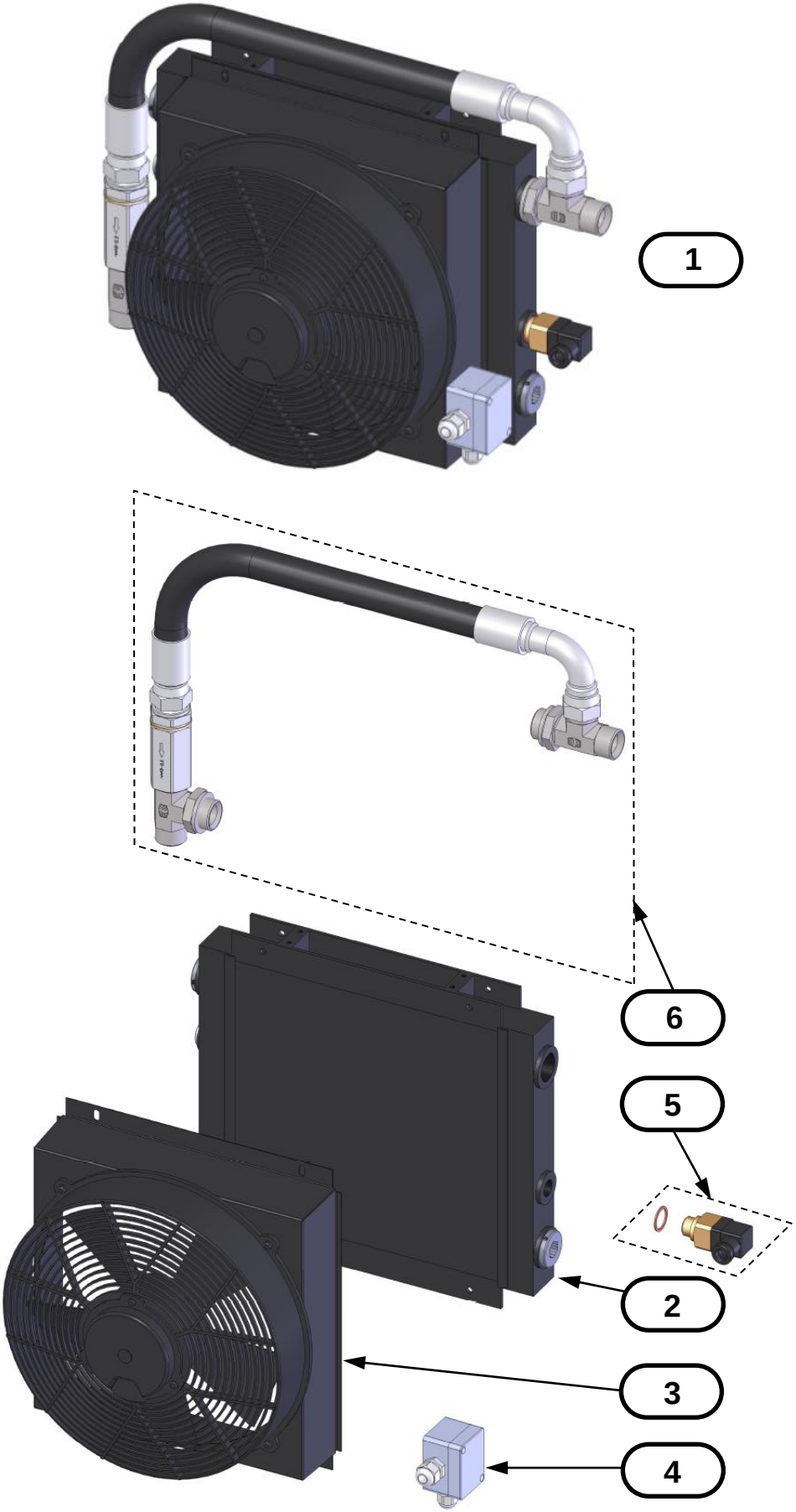

SPARE PARTS

	POS.	PART NO.	DESIGNATION	DETAILS	QUANTITY
ÖJ 5kW 12/24 VDC	**1**	**D400011350** **D400011400**	**ÖJ 5kW 12 VDC, OIL COOLER** **ÖJ 5kW 24 VDC, OIL COOLER**	**12 VDC** **24 VDC**	**1**
	2	1501090000	COOLER CORE	270 x 240 x 45 R3/4	1
	3	1501090010 1501090015	12 VDC COOLER FAN + CASING 24 VDC COOLER FAN + CASING	12VDC 24VDC	1
	4	V100605060 V100605062	12 VDC CONNECTION BOX 24 VDC CONNECTION BOX	12VDC 24VDC	1
	5	V100605050 V100605051	THERMOSTATIC SWITCH + SEAL	60 °C 50 °C*	1
	6	V100605080	HOSE KIT	R3/4"	1
ÖJ 10kW 12/24 VDC	**1**	**D400011450** **D400011500**	**ÖJ 10kW 12 VDC, OIL COOLER** **ÖJ 10kW 24 VDC, OIL COOLER**	**12 VDC** **24 VDC**	**1**
	2	1501090100	COOLER CORE	400 x 340 x 45 R1	1
	3	1501090110 1501090115	12 VDC COOLER FAN + CASING 24 VDC COOLER FAN + CASING	12VDC 24VDC	1
	4	V100605060 V100605062	12 VDC CONNECTION BOX 24 VDC CONNECTION BOX	12VDC 24VDC	1
	5	V100605050 V100605051	THERMOSTATIC SWITCH + SEAL	60 °C 50 °C*	1
	6	V100605090	HOSE KIT	R 1"	1

*OPTIONAL Thermostatic Switch 50°C

SPARE PARTS

	POS.	PART NO.	DESIGNATION	DETAILS	QUANTITY
ÖJ 15kW 12/24 VDC	**1**	**D400111550** **D400111600**	**ÖJ 15kW 12 VDC, OIL COOLER** **ÖJ 15kW 24 VDC, OIL COOLER**	**12 VDC** **24 VDC**	**1**
	2	1501090130	COOLER CORE	400 x 365 x 63 R1	1
	3	1501090110 1501090115	12 VDC COOLER FAN + CASING 24 VDC COOLER FAN + CASING	12VDC 24VDC	1
	4	V100605060 V100605062	12 VDC CONNECTION BOX 24 VDC CONNECTION BOX	12VDC 24VDC	1
	5	V100605050 V100605051	THERMOSTATIC SWITCH + SEAL	60 °C 50 °C*	1
	6	V100605090	HOSE KIT	R 1"	1
ÖJ 20kW 12/24 VDC	**1**	**D400111650** **D400111700**	**ÖJ 20kW 12 VDC, OIL COOLER** **ÖJ 20kW 24 VDC, OIL COOLER**	**12 VDC** **24 VDC**	**1**
	2	1501090150	COOLER CORE	480 x 405 x 63 R1	1
	3	1501090160 1501090165	12 VDC COOLER FAN + CASING 24 VDC COOLER FAN + CASING	12VDC 24VDC	1
	4	V100605060 V100605062	12 VDC CONNECTION BOX 24 VDC CONNECTION BOX	12VDC 24VDC	1
	5	V100605050 V100605051	THERMOSTATIC SWITCH + SEAL	60 °C 50 °C*	1
	6	V100605095	HOSE KIT	R 1"	1
ÖJ 25kW 12/24 VDC	**1**	**D400111750** **D400111800**	**ÖJ 25kW 12 VDC, OIL COOLER** **ÖJ 25kW 24 VDC, OIL COOLER**	**12 VDC** **24 VDC**	**1**
	2	1501090170	COOLER CORE	600 x 520 x 63 R1 1/4	1
	3	1501090180 1501090185	12 VDC COOLER FAN + CASING 24 VDC COOLER FAN + CASING	12VDC 24VDC	1
	4	V100605060 V100605062	12 VDC CONNECTION BOX 24 VDC CONNECTION BOX	12VDC 24VDC	1
	5	V100605050 V100605051	THERMOSTATIC SWITCH + SEAL	60 °C 50 °C*	1
	6	V100605100	HOSE KIT	R 1-1/4"	1

*OPTIONAL Thermostatic Switch 50°C