DYNASET

POWERED BY HYDRAULICS

KW Hydraulik
Aggregate und Werkzeuge
www.dynaset-hydraulik.de info@kw-hydraulik.de +49 3675 421 980

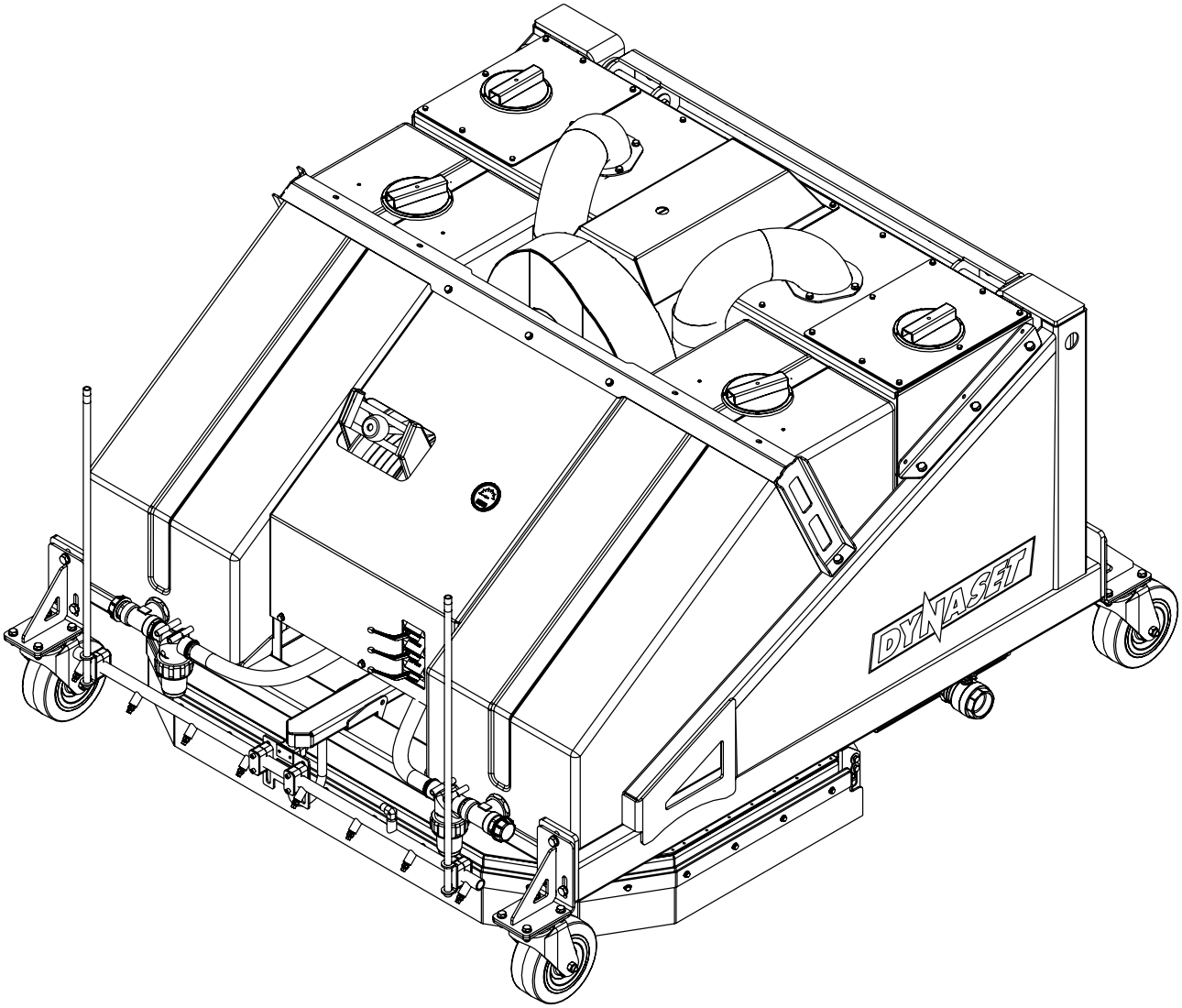

DATA SHEET

SURFACE CLEANING UNIT

SCU

v1.0
10/21

DIMENSIONS

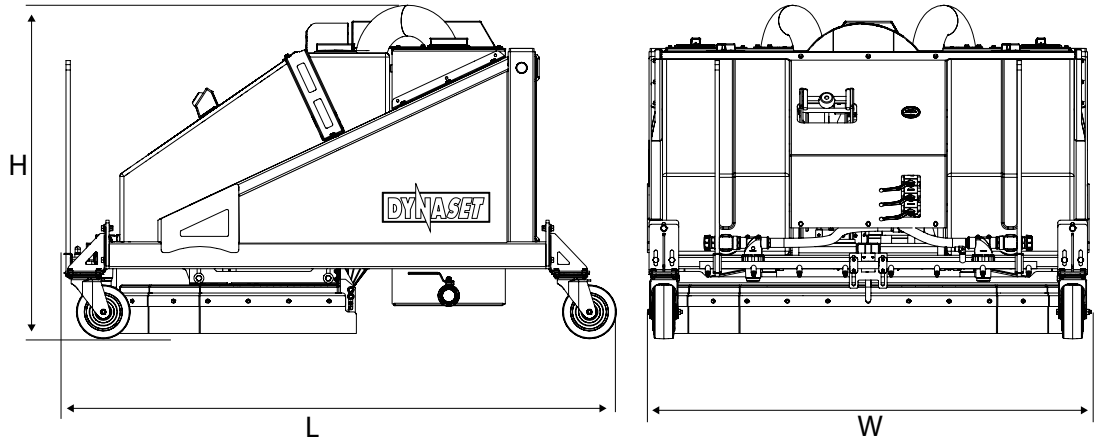

MODEL	DIMENSIONS, mm (in)			WEIGHT*
	L	W	H	kg (lbs)
SCU	2043 (80.4)	1638 (64.5)	1237 (48.7)	720 (1600)

* Weight without quick attachment.

HOSE CONNECTIONS

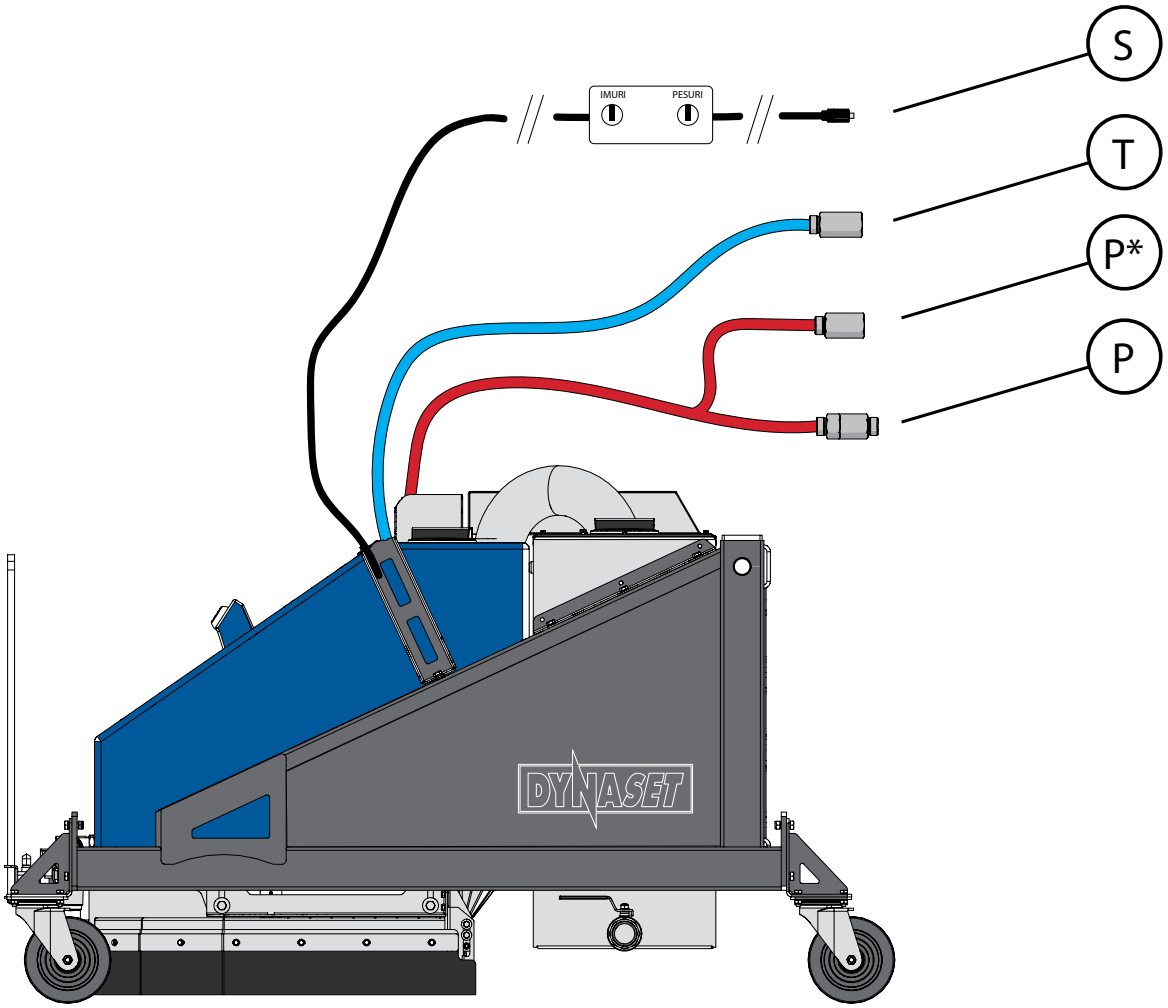

MODEL	PRESSURE LINE	RETURN LINE	ELECTRIC CONNECTOR
	P, P*	T	S
SCU	P = 1/2" ISO A-7241 P* = 1" TEMA 10021	1" TEMA 10011	+12V DIN

QUICK ATTACHMENT FASTENING POINTS

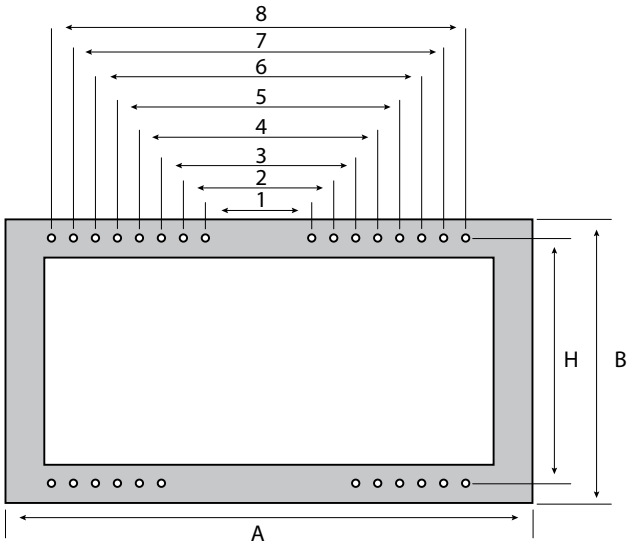

BOLT DISTANCE, mm (in)								
1	2	3	4	5	6	7	8	H
270 (10.6)	390 (15.3)	510 (20.1)	630 (24.8)	750 (29.5)	870 (34.2)	990 (39.0)	1110 (43.7)	675 (26.6)

OVERALL DIMENSIONS, mm (in)	
A	1190 (46.9)
B	765 (30.1)

TECHNICAL SPECIFICATIONS

		SCU
WATER POWER		
Water output max.	l/min (gpm)	50 (13.2)
Pressure max.	bar (psi)	220 (3200)
Working width	cm (in)	150 (59.1)
Water tank	l (gal)	540 (142.65)
Water filter size		R3/4"
Water filter mesh		80 or better
VACUUM WASHING UNIT		
Vacuum, max.	kPa	- 8
Airflow, max.	m^3/s	3,4
Washing nozzles		6
Working width	cm (in)	150 (59.1)
NOZZLE PIPE		
Washing pipe width	mm (in)	1250 (49.2)
Washing nozzles		8
WATER PISTOL		
Water pistol hose diameter		3/8"
Water pistol hose length	m (feet)	20 m (65,6)
Water pistol		ST2300-SW-800-2508
HYDRAULIC POWER REQUIREMENTS		
Oil flow nom.	l/min (gpm)	110 (23.0)
Oil flow max.	l/min (gpm)	150 (39.6)
Pressure max.	bar (psi)	210 (3 000)
HYDRAULIC FLUID REQUIREMENTS		
Viscosity	cSt	10–200 / optimum 25-35
Temperature **	°C (°F)	max. 70 (158)
Filter ratio	µm	25 or better
Cooling capacity requirement	kW	2

Gallons are U.S. liquid gallons

* Depending on hydraulic fluid.

KW Hydraulik
Aggregate und Werkzeuge
www.dynaset-hydraulik.de info@kw-hydraulik.de +49 3675 421 980

DYNASET
POWERED BY HYDRAULICS

Menotie 3
FI-33470 Ylöjärvi, Finland
tel: +358 3 3488 200
info@dynaset.com

ELECTRICITY
HG Hydraulic Generator
HGV POWER BOX Variable Hydraulic Generator System
HGV Variable Hydraulic Generator System
HWG Hydraulic Welding Generator
HGG Hydraulic Ground Power Generator

HIGH PRESSURE WATER
HPW Hydraulic High Pressure Water Pump
HPW Hydraulic Power Washer
KPL High Pressure Street Washing Unit
HPW-DUST High Pressure Dust Suppression System
PPL High Pressure Pipe Cleaning Unit
HDF Hydraulic Drilling Fluid Pump
HPW-FIRE High Pressure Firefighting System
FP Firefighting Piercing Kit
JPL High Pressure Bin Washing System
HSP Hydraulic Submersible Pump

COMPRESSED AIR
HK Hydraulic Piston Compressor
HKR Hydraulic Screw Compressor
HKL Hydraulic Rotary Vane Compressor

VACUUM
HCF Hydraulic Centrifugal Fan
HRVB Hydraulic Recycling Vacuum Bucket

MAGNET POWER
HMG PRO Hydraulic Magnet Generator
MAG Lifting Magnet
HMAG PRO Hydraulic Magnet

VIBRATION
HVB Hydraulic Vibra
HVD Hydraulic Directional Vibra
HRC Hydraulic Reversal Cylinder

POWER BOOSTING
HPI Hydraulic Pressure Intensifier
HPIC Hydraulic Pressure Intensifier for Cylinder

KNOW-HOW
Hydraulic Power Take-off (PTO)
Installation Valves
HMV Hydraulic Modular Valve System
HHK Hydraulic Grinder
HV Hydraulic Winch & HVY Hydraulic Winch Unit
De-Icing Technology
HEU Hydraulic Expansion Unit
HPU Hydraulic Power Unit
HRU Hydraulic Rescue Unit

www.dynaset.com